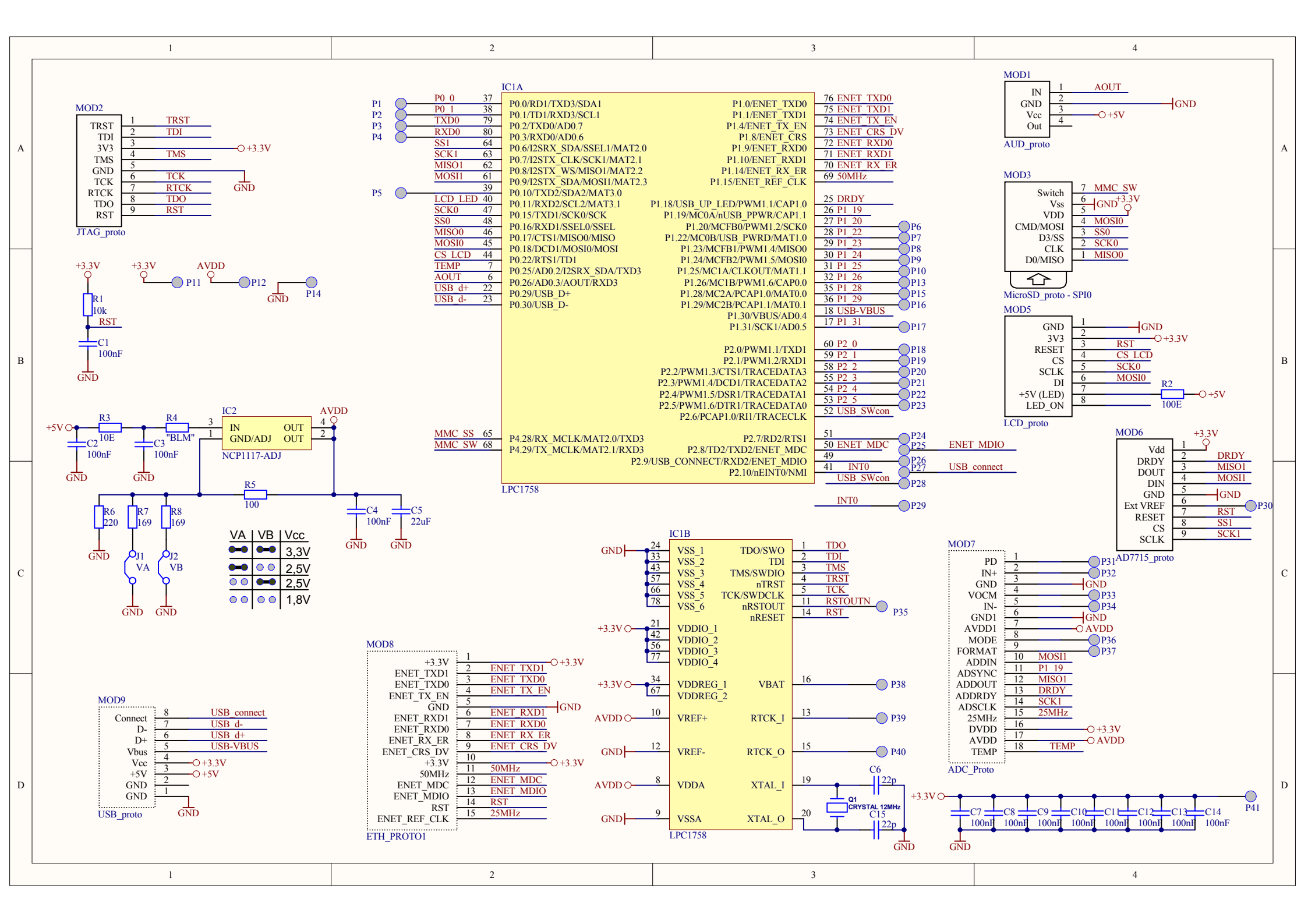

MOD2
JTAG_proto
TRST
TDI
3V3
TMS
GND
TCK
RTCK
TDO
RST
+3.3V
GND
IC1A
LPC1758
P0.0/RD1/TXD3/SDA1
P0.1/TD1/RXD3/SCL1
P0.2/TXD0/AD0.7
P0.3/RXD0/AD0.6
P0.6/I2SRX_SDA/SSEL1/MAT2.0
P0.7/I2STX_CLK/SCK1/MAT2.1
P0.8/I2STX_WS/MISO1/MAT2.2
P0.9/I2STX_SDA/MOSI1/MAT2.3
P0.10/TXD2/SDA2/MAT3.0
P0.11/RXD2/SCL2/MAT3.1
P0.15/TXD1/SCK0/SCK
P0.16/RXD1/SSEL0/SSEL
P0.17/CTS1/MISO0/MISO
P0.18/DCD1/MOSI0/MOSI
P0.22/RTS1/TD1
P0.25/AD0.2/I2SRX_SDA/TXD3
P0.26/AD0.3/AOUT/RXD3
P0.29/USB_D+
P0.30/USB_D-
P4.28/RX_MCLK/MAT2.0/TXD3
P4.29/TX_MCLK/MAT2.1/RXD3
P1.0/ENET_TXD0
P1.1/ENET_TXD1
P1.4/ENET_TX_EN
P1.8/ENET_CRS
P1.9/ENET_RXD0
P1.10/ENET_RXD1
P1.14/ENET_RX_ER
P1.15/ENET_REF_CLK
P1.18/USB_UP_LED/PWM1.1/CAP1.0
P1.19/MC0A/nUSB_PPWR/CAP1.1
P1.20/MCFB0/PWM1.2/SCK0
P1.22/MC0B/USB_PWRD/MAT1.0
P1.23/MCFB1/PWM1.4/MISO0
P1.24/MCFB2/PWM1.5/MOSI0
P1.25/MC1A/CLKOUT/MAT1.1
P1.26/MC1B/PWM1.6/CAP0.0
P1.28/MC2A/PCAP1.0/MAT0.0
P1.29/MC2B/PCAP1.1/MAT0.1
P1.30/VBUS/AD0.4
P1.31/SCK1/AD0.5
P2.0/PWM1.1/TXD1
P2.1/PWM1.2/RXD1
P2.2/PWM1.3/CTS1/TRACEDATA3
P2.3/PWM1.4/DCD1/TRACEDATA2
P2.4/PWM1.5/DSR1/TRACEDATA1
P2.5/PWM1.6/DTR1/TRACEDATA0
P2.6/PCAP1.0/RI1/TRACECLK
P2.7/RD2/RTS1
P2.8/TD2/TXD2/ENET_MDC
P2.9/USB_CONNECT/RXD2/ENET_MDIO
P2.10/nEINT0/NMI
MMC_SS
MMC_SW
ENET_TXD0
ENET_TXD1
ENET_TX_EN
ENET_CRS_DV
ENET_RXD0
ENET_RXD1
ENET_RX_ER
50MHz
DRDY
USB-VBUS
USB_SWcon
ENET_MDIO
USB_connect
INT0
MOD1
AUD_proto
IN
GND
Vcc
Out
AOUT
+5V
MOD3
MicroSD_proto - SPI0
Switch
Vss
VDD
CMD/MOSI
D3/SS
CLK
D0/MISO
MMC_SW
MOSI0
SS0
SCK0
MISO0
MOD5
LCD_proto
GND
3V3
RESET
CS
SCLK
DI
+5V (LED)
LED_ON
RST
CS_LCD
SCK0
MOSI0
R2
100E
MOD6
AD7715_proto
Vdd
DRDY
DOUT
DIN
GND
Ext VREF
RESET
CS
SCLK
DRDY
MISO1
MOSI1
RST
SS1
SCK1
P30
IC2
NCP1117-ADJ
IN
GND/ADJ
OUT
OUT
AVDD
R1
10k
C1
100nF
R3
10E
R4
"BLM"
C2
100nF
C3
100nF
R5
100
R6
220
R7
169
R8
169
J1
VA
J2
VB
C4
100nF
C5
22uF
VA | VB | Vcc
3,3V
2,5V
2,5V
1,8V
IC1B
LPC1758
VSS_1
VSS_2
VSS_3
VSS_4
VSS_5
VSS_6
VDDIO_1
VDDIO_2
VDDIO_3
VDDIO_4
VDDREG_1
VDDREG_2
VREF+
VREF-
VDDA
VSSA
TDO/SWO
TDI
TMS/SWDIO
nTRST
TCK/SWDCLK
nRSTOUT
nRESET
VBAT
RTCK_I
RTCK_O
XTAL_I
XTAL_O
TDO
TDI
TMS
TRST
TCK
RSTOUTN
RST
P35
P38
P39
P40
Q1
CRYSTAL 12MHz
C6
22p
C15
22p
MOD7
ADC_Proto
PD
IN+
GND
VOCM
IN-
GND1
AVDD1
MODE
FORMAT
ADDIN
ADSYNC
ADDOUT
ADDRDY
ADSCLK
25MHz
DVDD
AVDD
TEMP
P31
P32
P33
P34
P36
P37
MOSI1
P1_19
MISO1
DRDY
SCK1
25MHz
TEMP
P41
C7
C8
C9
C10
C11
C12
C13
C14
100nF
MOD8
ETH_PROTO1
+3.3V
ENET_TXD1
ENET_TXD0
ENET_TX_EN
GND
ENET_RXD1
ENET_RXD0
ENET_RX_ER
ENET_CRS_DV
+3.3V
50MHz
ENET_MDC
ENET_MDIO
RST
ENET_REF_CLK
25MHz
MOD9
USB_proto
Connect
D-
D+
Vbus
Vcc
+5V
GND
GND
USB_connect
USB_d-
USB_d+
USB-VBUS